PROFESSIONAL ELECTROL

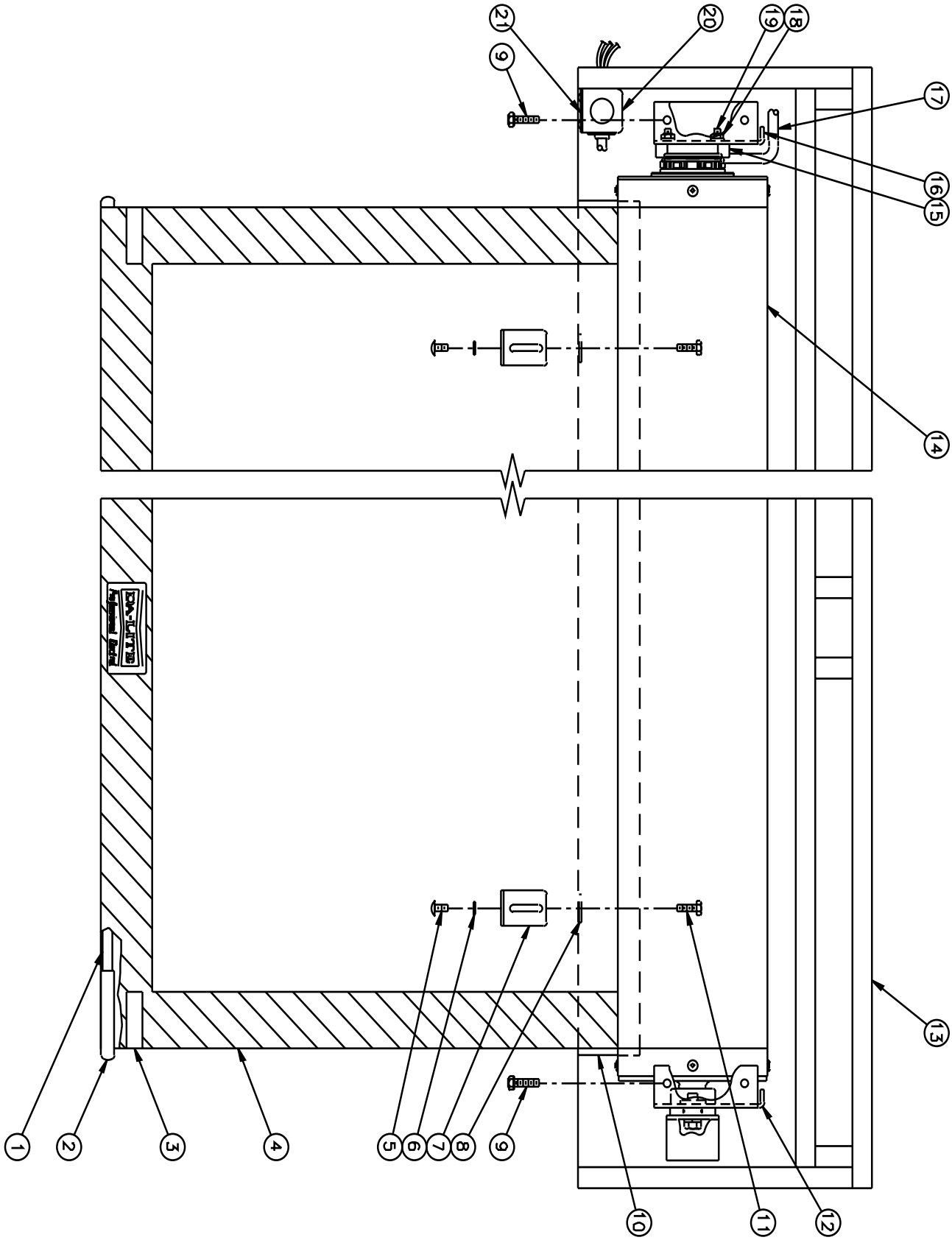

PROFESSIONAL ELECTROL

Item No.	Da-Lite Part No.	Description	Quantity Required	List Price Each
1	46345	Slat, 3/8" diameter for 12' screens	1	$12.00
	46346	Slat, 3/8" diameter for 14' and 210" diagonal screens	1	14.00
	46347	Slat, 3/8" diameter for 16' and 240" diagonal screens	1	16.00
	46348	Slat, 3/8" diameter for 18' screens	1	18.00
	93022	Slat, 1/2" diameter for 20' screens	1	21.00
	93023	Slat, 1/2" diameter for 22' screens	1	24.00
	93024	Slat, 1/2" diameter for 24' screens	1	26.00
2	46763	Slat cap, black for 12'-18' screens	2	0.24
	91875	Slat cap, black for 20'-24' screens	2	0.30
3	46922	Tape for pocket, black	2	0.16
4	79635	Fabric, Matte White 9' x 12'	1	572.00
	46196	Fabric, Glass Beaded 9' x 12'	1	572.00
	79637	Fabric, Matte White 12' x 12'	1	528.00
	46197	Fabric, Glass Beaded 12' x 12'	1	528.00
	46134	Fabric, Matte White 10' 6" x 14'	1	732.00
	46142	Fabric, Glass Beaded 10' 6" x 14'	1	732.00
	46135	Fabric, Matte White 14' x 14'	1	958.00
	46143	Fabric, Glass Beaded 14' x 14'	1	958.00
	46136	Fabric, Matte White 12' x 16'	1	916.00
	46144	Fabric, Glass Beaded 12' x 16'	1	916.00
	46137	Fabric, Matte White 16' x 16'	1	1,200.00
	46145	Fabric, Glass Beaded 16' x 16'	1	1,200.00
	46138	Fabric, Matte White 13' 6" x 18'	1	1,226.00
	46149	Fabric, Glass Beaded 13' 6" x 18'	1	1,226.00
	46139	Fabric, Matte White 18' x 18'	1	1,386.00
	46162	Fabric, Glass Beaded 18' x 18'	1	1,386.00
	46140	Fabric, Matte White 15' x 20'	1	1,360.00
	46146	Fabric, Glass Beaded 15' x 20'	1	1,360.00
	46141	Fabric, Matte White 20' x 20'	1	1,720.00
	46147	Fabric, Glass Beaded 20' x 20'	1	1,720.00
	81782	Fabric, Matte White 11' x 22'	1	1,254.00
	81786	Fabric, Glass Beaded 11' x 22'	1	1,254.00
	81783	Fabric, Matte White 16' 6" x 22'	1	1,720.00
	81787	Fabric, Glass Beaded 16' 6" x 22'	1	1,720.00
	81784	Fabric, Matte White 22' x 22'	1	2,250.00
	81788	Fabric, Glass Beaded 22' x 22'	1	2,250.00
	46219	Fabric, Matte White 12' x 24'	1	1,366.00
	46166	Fabric, Glass Beaded 12' x 24'	1	1,366.00
	81785	Fabric, Matte White 18' x 24'	1	2,020.00
	81789	Fabric, Glass Beaded 18' x 24'	1	2,020.00
	81660	Fabric, Matte White 123" x 164" - 210" diagonal	1	732.00
	81661	Fabric, Glass Beaded 123" x 164" - 210" diagonal	1	732.00
	85573	Fabric, Matte White 141" x 188" - 240" diagonal	1	916.00
	46144	Fabric, Glass Beaded 141" x 188" - 240" diagonal	1	916.00
5	83702	Screw for ironing board	5	0.10
6	44735	Lock washer for ironing board	5-9	0.10
7	83701	Ironing board bracket for 14'-18' screens	5-7	5.20
	89108	Ironing board bracket for 20'-24' screens	7-9	7.00
8	50877	Nut for ironing board	5-9	0.34
9	83501	Screw for roller bracket	8	0.24
10	83699	Ironing board for 14' and 210" diagonal screens	1	89.00
	83718	Ironing board for 16' and 240" diagonal screens	1	94.00

PROFESSIONAL ELECTROL

Item No.	Da-Lite Part No.	Description	Quantity Required	List Price Each
	83719	Ironing board for 18' screens	1	102.00
	83720	Ironing board for 20' screens	1	104.00
	83721	Ironing board for 22' screens	1	106.00
	83382	Ironing board for 24' screens	1	108.00
11	44777	Screw for ironing board bracket	5-9	0.10
12	83011	Roller bracket, pin end for 12'-18' screens	1	26.00
	89039	Roller bracket, pin end for 20'-24' screens	1	28.00
	83017	Bearing, flange	1	14.50
13	81796	Wood box assembly for 12' screens	1	1,242.00
	81667	Wood box assembly for 14' and 210" diagonal screens	1	1,480.00
	81668	Wood box assembly for 16' and 240" diagonal screens	1	1,542.00
	81669	Wood box assembly for 18' screens	1	1,596.00
	89115	Wood box assembly for 20' screens	1	1,790.00
	89116	Wood box assembly for 22' screens	1	1,916.00
	89117	Wood box assembly for 24' screens	1	2,042.00
14	81795	Roller assembly, 5 3/4" diameter for 12' screens	1	362.00
	81662	Roller assembly, 5 3/4" diameter for 14' and 210" diagonal screens	1	408.00
	81663	Roller assembly, 5 3/4" diameter for 16' and 240" diagonal screens	1	452.00
	81664	Roller assembly, 5 3/4" diameter for 18' screens	1	498.00
	89110	Roller assembly, 7" diameter for 20' screens	1	710.00
	89111	Roller assembly, 7" diameter for 22' screens	1	760.00
	89112	Roller assembly, 7" diameter for 24' screens	1	810.00
	81651	Roller bracket, motor end for 12'-18' screens	1	25.50
	89037	Roller bracket, motor end for 20'-24' screens	1	28.00
15	84412	Motor bracket with spring	1	10.50
16	93206	Roller bracket, motor end for 12'-18' screens	1	25.50
	93208	Roller bracket, motor end for 20'-24' screens	1	28.00
17	82735	Motor assembly, 120 volt Somfy 535A2 PA	1	840.00
	82737	Motor assembly, 240 volt Somfy 540R1 PA	1	840.00
18	80874	Nut for motor end roller bracket	2	0.24
19	93543	Screw for motor end roller bracket	2	0.10
20	81659	Junction box assembly	1	9.00
21	81657	Junction box cover	1	2.40
22	46354	Universal hanger bracket, front (not shown)	3	11.50
	46355	Front hanger bracket for 12'-18' screens (not shown)	3	18.00
	46357	Back hanger bracket for 12'-18' screens (not shown)	3	10.00
	88787	Front hanger bracket for 20'-24' screens (not shown)	3	20.00
	88789	Back hanger bracket for 20'-24' screens (not shown)	3	12.00
	59159	Hardware for hanger brackets (not shown)	1	4.00
		Note: In the event the complete hangers and hardware are to be ordered, order as follows:		
	59155	Hangers and hardware for 12'-18' screens (not shown)	1	82.00
	89270	Hangers and hardware for 20'-24' screens (not shown)	1	90.00
23	80575	Wall switch, 120V white (not shown)	1	70.00
	40961	Wall switch, 120V ivory (not shown)	1	70.00
	91705	Wall switch, 240V white (not shown)	1	70.00
	30543	Wall switch, 240V ivory (not shown)	1	70.00